CORNER TIE

Corner quoin rough stone effect 32 × 24 × 4 cm

Corner quoin — polystyrene moulding, ready to install and paint.

EPS 100 POLYSTYRENE WITH POLYMER-QUARTZ COATING **FIRE BEHAVIOUR SELF-EXTINGUISHING**

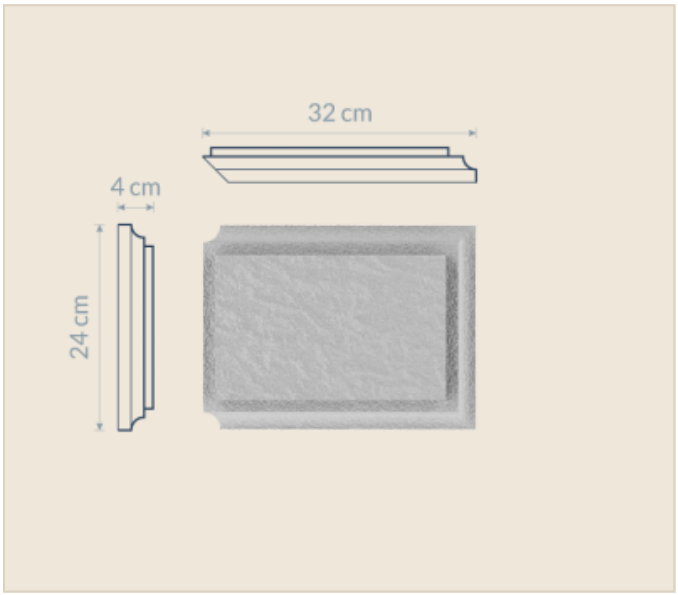

IDENTIFICATION

Dartank reference	**D6ML692C**
Dartank EAN	**3701839315408**
Material	**EPS 100 polystyrene with polymer-quartz coating**
Thickness	**4,0 cm**
Sales unit	**Piece**

OVERVIEW

Overview

These facade elements combine a light, self-extinguishing hardened expanded polystyrene core with a factory-applied, quartz-filled polymer-acrylic protective compound. Glued to render or external insulation and then painted, they recreate cornices, bands, window surrounds, keystones, sills and ornaments.

KEY BENEFITS

01
Lightweight

Expanded polystyrene core: easy handling and bonding without a support structure.

02
Protected

Elastic, hard quartz-filled polymer-acrylic compound applied at the factory.

03
Ready to paint

Paint with an elastic acrylic or silicone facade paint in the colour of your choice.

04
ETICS-compatible

Bonds to render or to thin-coat external thermal insulation systems.

05
Versatile

Cut and assembled on site for cornices, bands, window surrounds and corners.

06
Heritage look

Recreates classic or contemporary mouldings without heavy masonry.

PRODUCT CHARACTERISTICS

Height	**24,0 cm**
Length	**32,0 cm**
Material	**Polystyrène**

THE MATERIAL

EPS 100 polystyrene with polymer-quartz coating

Facade mouldings, cornices, window surrounds, keystones, sills, quoins and ornaments: hardened EPS core factory-protected by a quartz-filled polymer-acrylic compound, ready to glue and paint.

Composition	**Hardened EPS core, quartz-filled polymer-acrylic coating**
Density	**≤ 18 kg/m³**
Standard lengths	**120 / 160 / 200 / 240 cm**

CORE

EPS 100 expanded polystyrene (core)

Hardened, self-extinguishing expanded polystyrene core with a density of up to 18 kg/m³.

Density	**≤ 18 kg/m³**

SURFACE LAYER

Polymer-acrylic coating with quartz filler

Protective compound based on polymer-acrylic resins with added quartz aggregate, factory-applied to the EPS core; elastic and hard.

Composition	**Polymer-acrylic resins and quartz aggregate**

PERFORMANCE AND TEST RESULTS

Property	Standard	Result
Expanded polystyrene grade	EN 13163	**EPS 100 / EPS 70**
Fire behaviour		**Self-extinguishing**
Weather resistance		**Weather-resistant**
Length tolerance		**± 1 cm**

Property	Standard	Result
Hazardous substances		**Non-toxic (manufacturer's statement)**
Expanded polystyrene grade	EN 13163	**EPS 100 / EPS 70**
Fire behaviour		**Self-extinguishing**

TECHNICAL DOCUMENTS

BIM
Fichiers BIM/CAO DWG · DXF · OBJ
On request

NOTICE
Notice de pose des éléments de façade
On request

INSTALLATION

Installation

1. **Temperature** From +5 °C to +30 °C, in dry weather.
2. **1. Substrate** Prepare the substrate according to the adhesive manufacturer's requirements.
3. **2. Layout** Measure, cut and position the profiles on the facade.
4. **3. Bonding** Bond to the substrate and to each other with a low-pressure polyurethane adhesive foam for EPS or an elastic reinforcing adhesive; temporarily support heavy elements (battens, nails, props) until set.
5. **4. Joints** Leave 0.5–0.8 cm between profiles, bonded with an elastic adhesive sealant; expansion joints every 10–15 m for cornices over 20 cm high.
6. **5. Sealing** Once the adhesive has cured, seal wall-contact edges, especially horizontal top edges, to prevent water ingress and streaks.
7. **6. Filling** Dust the joints, apply primer to the joints only, then the repair compound; sand after 6–8 h and apply a second coat.
8. **7. Painting** On a clean, dry, dust-free surface, wait at least 12 h in damp weather; elastic facade paint only; never paint a damp element.

Storage

- **Conditions** Flat, on a level surface, indoors and dry until installation; away from radiators and direct sun.
- **Stacking** Do not load stacked profiles: risk of deformation or sticking together.
- **Primer and repair compound** Between +5 °C and +30 °C, 6 months in the sealed original packaging.

> **WARNING**
>
> - **Paints** Silicate and solvent-based paints prohibited; avoid colours with HBW below 30.
> - **Associated products** Using unsuitable adhesives, sealants or paints may cause cracks, scratches or blisters; follow the data sheets of the products used.

Non-contractual document. Values are given for guidance; official documents are available on request.